SYM	REV	DESCRIPTION	DWN	APPROVED
–	NC	INITIAL RELEASE		
–	01	CREATE FROM AP-R-60-DR	05/11/12	

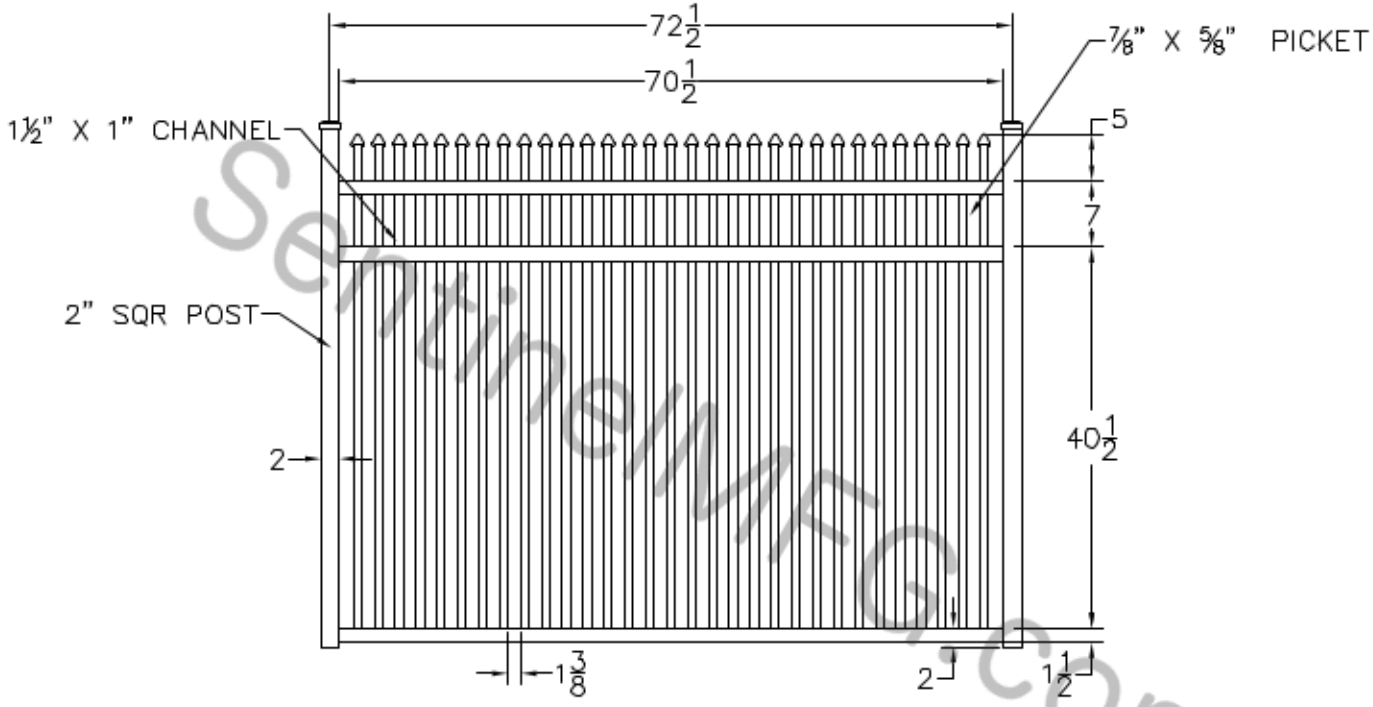

NOTES:

1. ALL DIMENSIONS IN INCHES.
2. INSTALL POSTS PER STANDARD CONSTRUCTION PRACTICES

SENTINEL MFG.
1527 NC HWY 711
LUMBERTON, NC 28360
(910) 735-1351

DRAWING:
REGAL GRADE
EXTRA PICKET – 54" HT
APPALACHIAN–DROP RAIL

SIZE	DWG NO.	REV
D	EP-R-54-AP	NC
SCALE	DATE 03-29-06	SHEET 1 OF 1

© 2004. This drawing may not be altered or reproduced without the permission of SENTINEL MFG.

SentinelMFG.com