ZONE	REV	DESCRIPTION	DATE	APPROVED
–	01	CREATED FROM OU–C–48–DR	05/29/12	

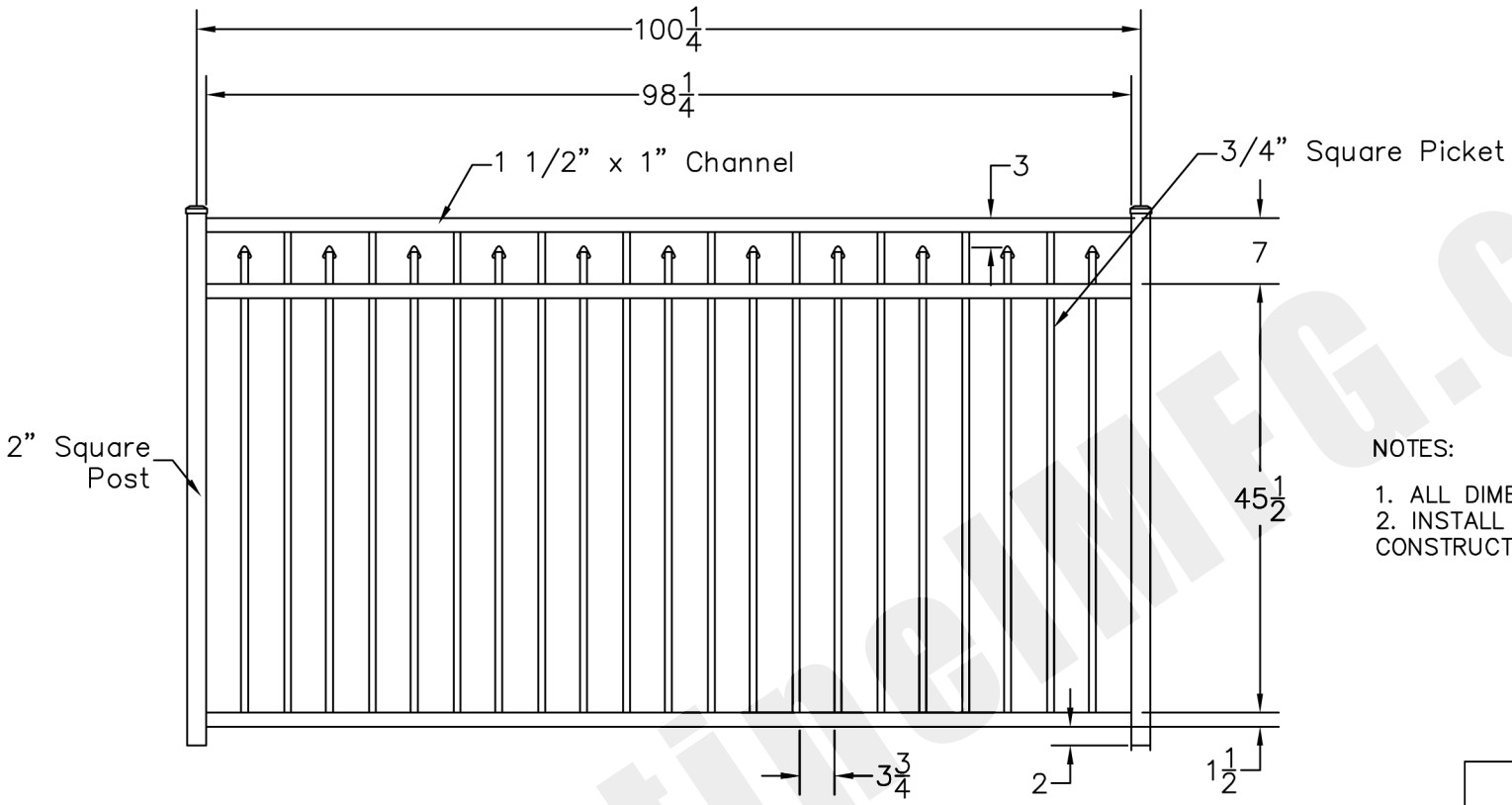

NOTES:

1. ALL DIMENSIONS IN INCHES.
2. INSTALL POSTS PER STANDARD CONSTRUCTION PRACTICES

SENTINEL MFG.
1527 HWY 711
LUMBERTON, NC 28358
(814) 404–7451

TOLERANCE UNLESS SPECIFIED

X/X = ±1/16
.X = ±.05
.XX = ±.025
.XXX = ±.006

ANGLE = ±0.5°

DRAWING:
COMMERCIAL GRADE
54" OUTBACK
DROP RAIL

SIZE	DWG NO.	REV
D	OU–C–54–DR	
SCALE	DATE 3–29–09	SHEET

© 2009. This drawing may not be altered or reproduced without the permission of SENTINEL MFG.

sentinelMFG.com